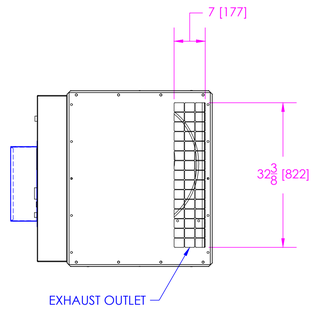

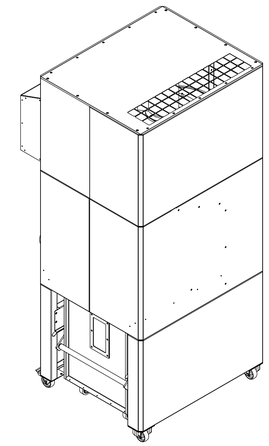

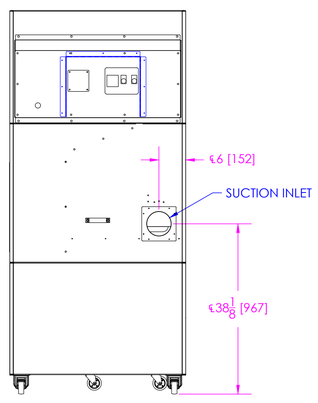

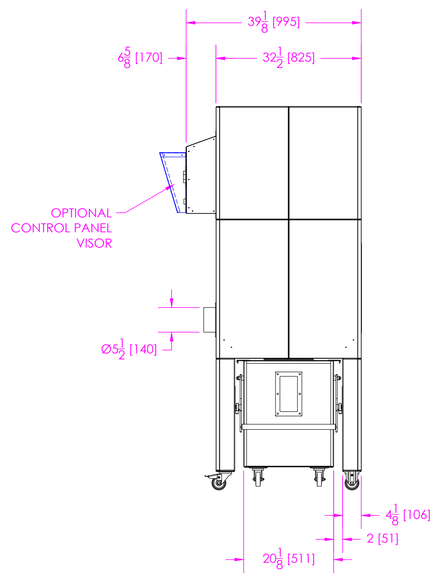

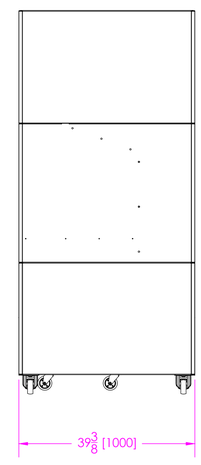

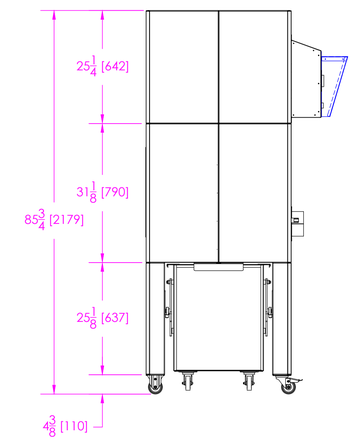

COIMA USA™
Solutions for dust collection, painting, and biomass systems
info@coimausa.com
7377 Doerr Lane, Suite 200
Schertz, TX 78154
Office: 206.454.7091
Toll Free: 800.417.9206
www.coimausa.com

THIS DRAWING IS AN INSTRUMENT OF SERVICE. THE DRAWING AND SPECIFICATIONS, IDEAS, DESIGN AND ARRANGEMENTS REPRESENTED THEREBY ARE THE PROPERTY OF TOTAL AIR ENERGY GROUP LLC (TAE). THIS DRAWING CONVEYS THE DESIGN INTENT OF TAE AND SHALL NOT BE USED FOR ANY OTHER PURPOSE OR BY ANY OTHER PARTY FOR ANY PURPOSE WITHOUT PRIOR WRITTEN CONSENT.

COIMA F-140
DUST COLLECTOR

REV.	DATE	DESCRIPTION

PERMIT SET ■
DATE: ----

ISSUED FOR CONSTRUCTION ☐
DATE: ----

AS BUILT ☐
DATE: ----

DWG BY: ----
CKD BY: ----
JOB NO.: ----
SHEET: 140