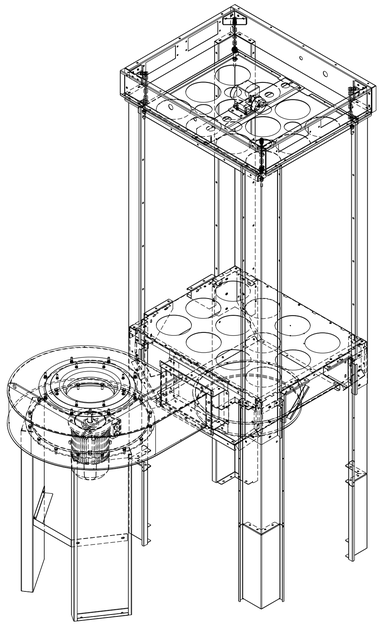

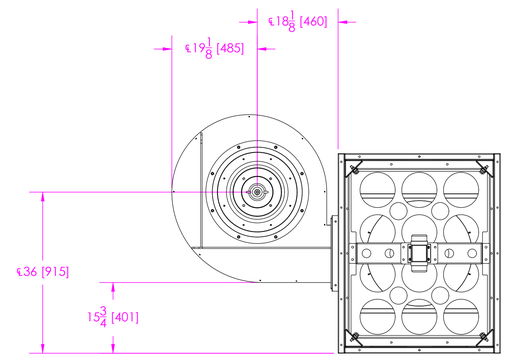

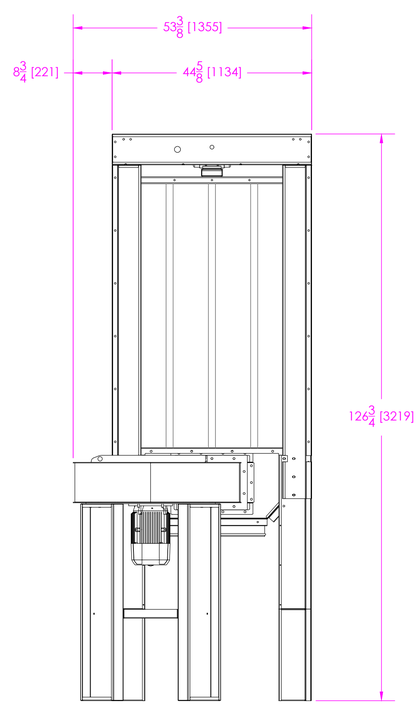

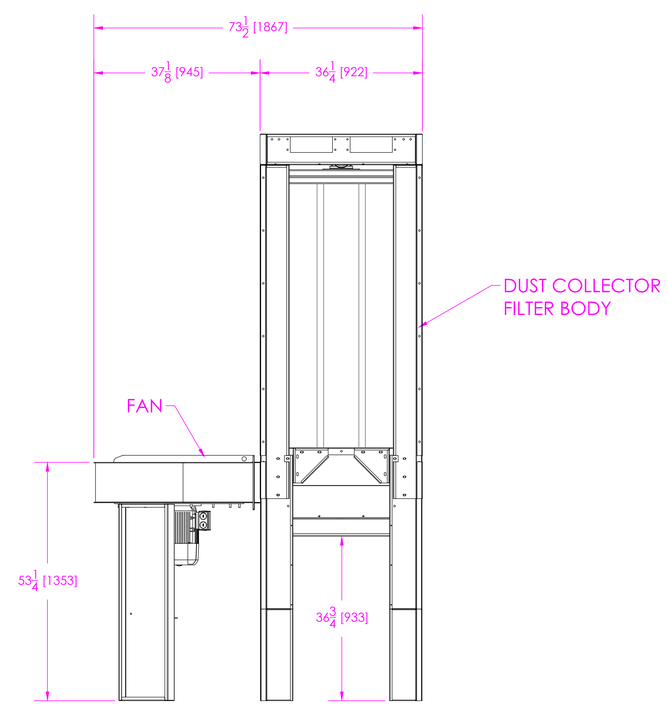

info@totalairproducts.com
7377 Doerr Lane, Suite 200
Schertz, TX 78154
Office: 206.454.7091
Toll Free: 800.417.9206
www.totalairproducts.com

TOTAL AIR PRODUCTS
IN COOPERATION WITH COIMA

THIS DRAWING IS AN INSTRUMENT OF SERVICE. THE DRAWING AND SPECIFICATIONS, IDEAS, DESIGN AND ARRANGEMENTS REPRESENTED THEREBY ARE THE PROPERTY OF TOTAL AIR PRODUCTS LLC (TAP). THIS DRAWING CONVEYS THE DESIGN INTENT OF TAP AND SHALL NOT BE USED FOR ANY OTHER PURPOSE OR BY ANY OTHER PARTY FOR ANY PURPOSE WITHOUT PRIOR WRITTEN CONSENT.

SHK-1 ENCLOSURELESS DUST COLLECTOR VERSION 2

REV.	DATE	DESCRIPTION

PERMIT SET ■
DATE: 11-21-24

ISSUED FOR CONSTRUCTION ☐
DATE: ----

AS BUILT ☐
DATE: ----

SHK DUST COLELCTOR V2

DWG BY:	GN
CKD BY:	----
JOB NO.:	----

SHEET:

SHK-1